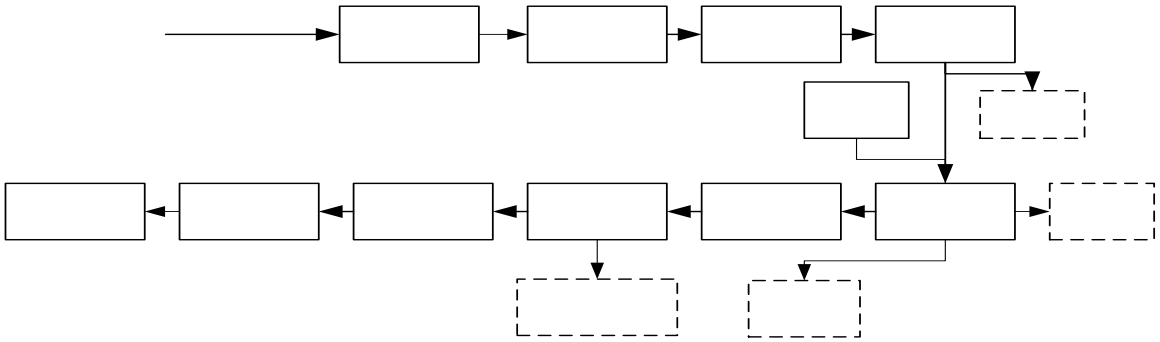

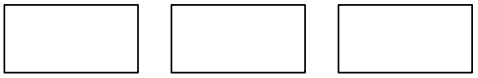

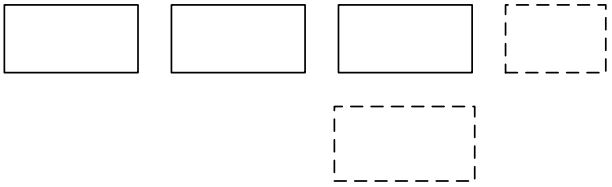

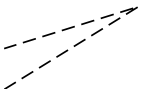

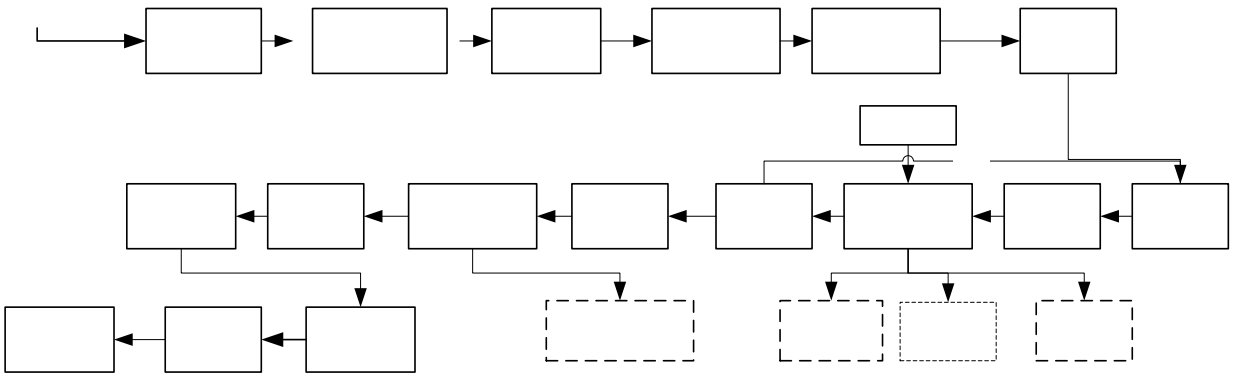

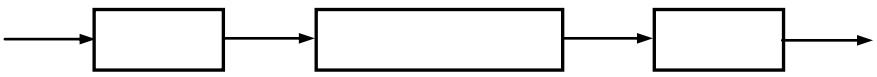

“ ”

110

−− 5

−− −4

.